Work Order ID 61208

Wednesday, August 11, 2010 10:15:29 AM

Item ID: D2622-120C **Accept** **Setup Start**

Revision ID: **Stop**

Item Name: Step Extrusion

Start Date: 8/11/2010 **Start Qty:** ~~80.00~~ 121 **Cust Item ID:**

Required Date: 8/25/2010 **Req'd Qty:** 80.00 **Customer:**

Reference:

Approvals: **Process Plan:** MF **Date:** 10-8-11 **Tooling:** _____ **Date:** _____ **Run Start**

QC: _____ **Date:** _____ **SPC (Y/N):** _____ **Date:** _____ **Stop**

Sequence ID/ Work Center ID	Operation Description	Set Up/ Run Hours	Tool ID	Tool #	Plan Code	Accept Qty	Reject Qty	Reject Number	Insp. Stamp
Draw Nbr	**Revision Nbr**								
D2622	Rev C1								
100 Purchasing	PURCHASING	0.00							
Purchasing	**Memo** Issue P/O: 12 408 □a) Extrude as per Dwg D2622 Rev. C□b) Material: 6061-T6 (QQ-A-200/8)□c) Minimum yield tensile strength = 35 ksi□d) Minimum ultimate tensile strength = 38 ksi □e) Minimum elongation = 8%□f) Order at 120" longg) Bon L Canada Inc.	0.00				CL	10/8/12	121	
110 Packaging	Receive & Inspect for Damage & Mat'l Certs	0.00							
Packaging	**Memo** Ensure material certification is attached	0.00					10/8/10	137	
120 QC	QC6- Inspect dimensions to drawing	0.00							
Quality Control	**Memo** Check Pull test per Dwg D2622 for compliance page attached Check hardness with Webster tester	0.00							

Pulles qty x10 for random inspection 8/10/07/17

8/10/07/16

counter 137

P to →

Dart Aerospace Ltd

W/O:	WORK ORDER CHANGES						
DATE	STEP	PROCEDURE CHANGE	By	Date	Qty	Approval Chief Eng / Prod Mgr	Approval QC Inspector

Part No: D2622-120C PAR #: _____ Fault Category: ~~A~~ Supplier Signature Aluminum. NCR: (Yes) No DQA: [signature] Date: 11.03.29

Resolution: accepted Disposition: use as is. QA: N/C Closed: [signature] Date: 11/03/29

NCR: 61208	WORK ORDER NON-CONFORMANCE (NCR)							
DATE	STEP	Description of NC Section A	Corrective Action Section B: Initial Chief Eng	Action Description Chief Eng	Sign & Date	Verification Section C	Approval Chief Eng	Approval QC Inspector
10.09.13	100	width ≈ 3.012 Height ≈ 2.540 Thickess up to 0.100". over tolerance	[signature] 10.09.13 QS/042	Acceptable. CHECK W/ EXTRUDER ABOUT TOOL, MAY HAVE TO BE RE-MADE	[signature] 10.09.13 ↑	[signature] 11/03/29	[signature] 10.09.13 QS/042	8 10/09/13
		Re: Tooling.		ADD copy of email as proof.	CL 11/02/11		QS/042	8 10/09/13
				NCR11-524				

NOTE: Date & initial all entries

H:\fFORMS\Quality Assurance\approved QA\NCRWO RevE

Work Order ID 61208

Wednesday, August 11, 2010 10:15:29 AM

Item ID: D2622-120C **Accept** **Setup Start**

Revision ID:

Item Name: Step Extrusion **Stop**

Start Date: 8/11/2010 **Start Qty:** 80.00 **Cust Item ID:**

Required Date: 8/25/2010 **Req'd Qty:** 80.00 **Customer:**

Reference:

Approvals: **Process Plan:** _____ **Date:** _____ **Tooling:** _____ **Date:** _____ **Run Start**

QC: _____ **Date:** _____ **SPC (Y/N):** _____ **Date:** _____ **Stop**

Sequence ID/ Work Center ID	Operation Description	Set Up/ Run Hours	Tool ID	Tool #	Plan Code	Accept Qty	Reject Qty	Reject Number	Insp. Stamp
130	Identify as per dwg & Stock Location: Back Hall	0.00							
Packaging						DL	x137	10/09/10	
Packaging	Memo	0.00							
140	QC21- Final Inspection - Work Order Release	0.00							
QC						CK	11/03/29		
Quality Control	Memo	0.00							

MF
10-9-17

Dart Aerospace Ltd

W/O:		WORK ORDER CHANGES					
DATE	STEP	PROCEDURE CHANGE	By	Date	Qty	Approval Chief Eng / Prod Mgr	Approval QC Inspector

Part No: _____ **PAR #:** _____ **Fault Category:** _____ **NCR:** Yes No **DQA:** _____ **Date:** _____

Resolution: _____ **Disposition:** _____ **QA: N/C Closed:** _____ **Date:** _____

NCR:		WORK ORDER NON-CONFORMANCE (NCR)						
DATE	STEP	Description of NC Section A	Corrective Action Section B			Verification Section C	Approval Chief Eng	Approval QC Inspector
			Initial Chief Eng	Action Description Chief Eng	Sign & Date			

NOTE: Date & initial all entries

H:\fFORMS\Quality Assurance\approved QA\NCRWO RevE

Picklist Print

Wednesday, August 11, 2010 10:15:29 AM

Work Order ID: 61208

Parent Item: D2622-120C

Parent Item Name: Step Extrusion

Start Date: 8/11/2010 **Required Date:** 8/25/2010

Start Qty: 80.00 **Required Qty:** 80.00

Comments:

Component Item ID/ Item Name	Replacement Item ID	Mfg/ Purch	Bin Item	Primary Location	Last Location	Route Seq ID	Unit of Measure	Qty on Hand	Qty per Kit	Total Qty	Qty Issued	Date Issued	Status
D2622-120CP Extrusion		Purchased	No			110	Each	0.0000	1	80			

Pcs 8/10 137

Dart Aerospace Ltd

W/O:		WORK ORDER CHANGES					
DATE	STEP	PROCEDURE CHANGE	By	Date	Qty	Approval Chief Eng / Prod Mgr	Approval QC Inspector

Part No: _____ **PAR #:** _____ **Fault Category:** _____ **NCR:** Yes No **DQA:** _____ **Date:** _____

Resolution: _____ **Disposition:** _____ **QA: N/C Closed:** _____ **Date:** _____

NCR:		WORK ORDER NON-CONFORMANCE (NCR)						
DATE	STEP	Description of NC Section A	Corrective Action Section B			Verification Section C	Approval Chief Eng	Approval QC Inspector
			Initial Chief Eng	Action Description Chief Eng	Sign & Date			

NOTE: Date & initial all entries

H:\fFORMS\Quality Assurance\approved QA\NCRWO RevE

DESIGN	DRAWN BY	DART AEROSPACE LTD HAWKESBURY, ONTARIO, CANADA	
KE	GP		
CHECKED	APPROVED	DRAWING NO.	REV. C
#	#	D2622	SHEET 1 OF 1
DATE		TITLE	SCALE
02.09.11		STEP EXTRUSION	1:1

A	96.11.29	NEW ISSUE
B	97.12.12	CHANGE MATERIAL, ADD TOL. QSI
C	02.09.11	0.080 WAS 0.085; ADD PART & DIE No.
C1	# GP 02.10.04	ADD 'REV. A' TO DIE NUMBER.

RELEASED 02.09.11 #

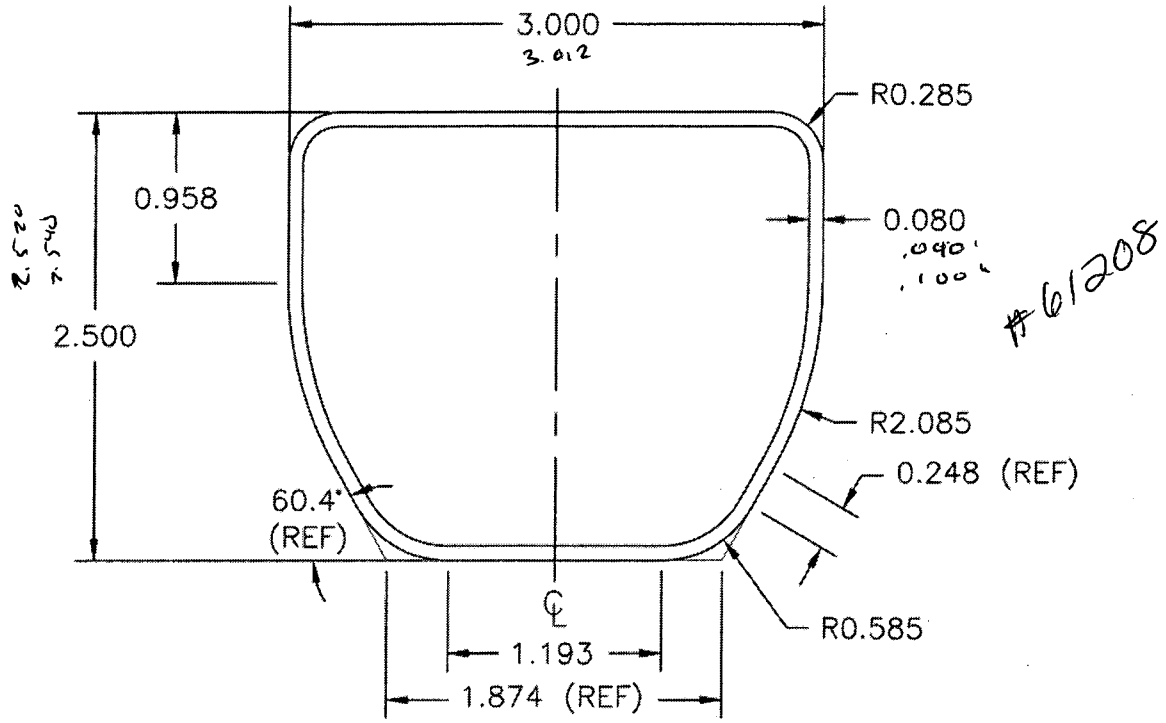

D2622–XXX STEP EXTRUSION

1) PART NUMBER IS D2622–XXX WHERE 'XXX' IS CUT LENGTH IN INCHES (EG. D2622–120 IS 120" LONG)
2) MATERIAL 6061–T6 (QQ–A–200/8)
3) MANUFACTURED USING BON–L DIE # 897123 REV. A C1

4) A SAMPLE FROM EACH BATCH WILL BE PULL TESTED TO ASTM STANDARD B221 BY AN APPROVED TESTING FACILITY TO ENSURE THAT THE BATCH MEETS THE MINIMUM MECHANICAL PROPERTIES STATED BELOW:

   MINIMUM TENSILE YIELD STRENGTH = 35 ksi
   MINIMUM ULTIMATE TENSILE STRENGTH = 38 ksi
   MINIMUM ELONGATION = 8%

9 lbs / 0.0041

5) PART IS SYMMETRIC ABOUT CENTERLINE
6) TOLERANCES ARE PER DART QSI 018 UNLESS OTHERWISE NOTED
7) ALL DIMENSIONS ARE IN INCHES UNLESS OTHERWISE NOTED

Dart Aerospace Ltd

W/O:		WORK ORDER CHANGES					
DATE	STEP	PROCEDURE CHANGE	By	Date	Qty	Approval Chief Eng / Prod Mgr	Approval QC Inspector

Part No: _____ **PAR #:** _____ **Fault Category:** _____ **NCR:** Yes No **DQA:** _____ **Date:** _____

Resolution: _____ **Disposition:** _____ **QA: N/C Closed:** _____ **Date:** _____

NCR:		WORK ORDER NON-CONFORMANCE (NCR)						
DATE	STEP	Description of NC Section A	Corrective Action Section B			Verification Section C	Approval Chief Eng	Approval QC Inspector
			Initial Chief Eng	Action Description Chief Eng	Sign & Date			

NOTE: Date & initial all entries

H:\fFORMS\Quality Assurance\approved QA\NCRWO RevE

Dart Aerospace Ltd.
1270 Aberdeen Street
Hawkesbury, ON K6A 1K7
Tel: 613 632 9577
Fax: 613 632 1053

PURCHASE ORDER

Purchase Order ID PO12408

Purchase Order Date 8/13/10
PO Print Date 8/13/10

Order From : VC-BON001

SIGNATURE ALUMINUM
1850 CLEMENTS ROAD
PICKERING, ON L1W 3R8
CA

Contact Name		**Buyer**	Chantal Lavoie
Vendor Phone	800 563 1079	**Requisition Nbr**	
Vendor Fax	800 565 8339	**Tax Resale Nbr**	10127-2607
Vendor Account Nbr		**Terms**	Net 30
		Currency	CAD
		FOB	

Ship To : DART AEROSPACE LTD
1270 ABERDEEN
HAWKESBURY, ON K6A 1K7
CANADA

FAXED CL 8/13

Line Nbr	Reference / Revision ID / Vendor Part Number	Description/ Mfg ID	Req Date/ Taxable	Req Qty/ Unit of Measure	Ship Method	Unit Price	Extended Price
1	D2622-120CP	Extrusion	9/06/10 Yes	121.00 Each	Yours ppd	$25.5350.	$3,089.74

Req. 137 CL 8/13/10

Special Inst: EXTRUDE AS PER DWG D2622 REV. C B61208
MATERIAL: 6061-T6 AS PER (QQ-A-200/8)
120" LONG
MINIMUM YIELD TENSILE STRENGTH = 35 KSI
MINIMUM ULTIMATE TENSILE STRENGTH = 38 KSI
MINIMUM ELONGATION = 8%
BOL L CANADA TOOL #: 897123

PO Total: **$3,089.74**

MATERIAL CERTIFICATION REQ'D UPON DELIVERY

CL

No substitution or deviation without consent.
Certificate of Conformity or Material Certification required when applicable

Change Nbr: 1 **Change Date:** 8/13/10

signature aluminum CANADA INC.

SHIPPING MANIFEST

ACCT# 00046024

INVOICING COMPANY AND LOCATION
SIGNATURE ALUMINUM CANADA
1850 CLEMENTS ROAD
PICKERING ON L1W 3R8

MANIFEST DATE: 09-09-10
MANIFEST NUMBER: 683511
SALES ORDER NUMBER: 65181
REFER TO THESE NUMBERS ON ALL CORRESPONDENCE

SHIP TO
DART AEROSPACE LTD.
1270 ABERDEEN ST.
HAWKESBURY ON
K6A 1K7 CN
PHONE 613-632-5200

SOLD TO / PURCHASER
DART AEROSPACE LTD.
1270 ABERDEEN ST.
HAWKESBURY ON
K6A 1K7 CN
PHONE 613-632-5200

TERMS / FREIGHT: O / P

CREDIT REP: DHILLON, ROBE
SALES REP:

LOCATION	TRAILER NUMBER	SALESMAN	FIELD SALES REP	CUST SERVICE REP
PIC	57393	59358	Bates M 905-427-2235	Burton D 905-427-2227

CUSTOMER ID	ORDER DATE	CUSTOMER PO NUMBER	JOB	BILL OF LADING NUMBER
46024	08/13/10	PO12408		08410464

ITEM NO.	ORIGINAL ORDER QUANTITY	UNIT	PREVIOUS SHIPPED QUANTITY	MFG. PART NUMBER / CUSTOMER PART NUMBER	ALLOY & TEMPER / LENGTH / CUTTING TOLERANCE	FINISH DESCRIPTIONN / FABRICATION DESCRIPTION / SHIPPING TOLERANCE	THIS SHIPMENT NBR OF PKGS	GROSS POUNDS	NET QUANTITY	UNIT	QUANTITY DUE
01	1104	LB	0	DAA-897123-1	6061 /T6	MILL	3	1325	1285	LB	0
	1210	FT	0	D2622	120"	CERTIFICATE OF COMP			1369.99	FT	0
	121	PC	0		+3/16 "	(+015-015,0139-0102)			137	PC	0
					-0 "						
				LOT/TKT DETAIL:		65181010 / 370265	1	472	459		49 PC
						65181010 / 370266	1	472	459		49 PC
						65181010 / 370267	1	381	368		39 PC
							3	1325	1285	LB	
									1369.99	FT	
									137	PC	
							TOTALS				

Transportation/Traffic damages and/or shortage claims are to be noted on the delivery copy of sellers shipping manifests and signed and dated below by customers authorized representatives
No return materials will be accepted for credit without permission. The articles and/or services covered by this shipping manifest were produced in accordance with the fair labor standards act of 1938 as amended. Order accepted subject to the terms and conditions stated on the reverse side

PAGE 1

EXTMAN2 CUSTOMER ACKNOWLEDGEMENT OF GOODS DELIVERED AND CONDITION

DATE OF DELIVERY

DRIVER

signature aluminum CANADA INC.

CERTIFICATE OF COMPLIANCE

SIGNATURE ALUMINUM CANADA

1850 CLEMENTS ROAD
PICKERING, ON L1W 3R8

Cert Date	Cert No	Sales Order	Page
09/09/10	209540	65181	1

Cust PO	B/L No	Lot	Date
PO12408	08410464	65181010	9/09/10

Sold To 46024	Ship To 46024
DART AEROSPACE LTD. 1270 ABERDEEN ST. HAWKESBURY, ON K6A 1K7	DART AEROSPACE LTD. 1270 ABERDEEN ST. HAWKESBURY, ON K6A 1K7

Item No	Part No	Item Description	Cust Part
1.000	DAA-897123-1	DIE REV. A	D2622

Gross Weight	1325 LBS			
Net Qty	1,285 LB	137 PC	1370 FT	3 PKG

Specification	Die Desc
AMS-QQ-A-200/8 & ASTM B221-08 Solaska	

Mechanical Tests:

Test No.	Tensile MPA / KSI	Yield MPA / KSI	%Elongation	Conductivity	Bend/ Drift	HREW
1	286.2 / 41.5	260.8 / 37.9	10.7	.0		89

Chemical Analysis:

SI	FE	CU	MN	MG	CR	ZN	TI
.67	.22	.27	.04	.92	.06	.20	.02

This will certify that the material described herein has been inspected and tested in accordance with Signature Aluminum Canada's standard sampling and testing procedures or in accordance with the requirements of any specification forming a part of the material description to the extent indicated herein. Data of chemical composition for the material and test results from samples representative of the material are set forth above hereof or in any attachments hereto. This information shows that the material meets the applicable requirements. Inspection and test records are maintained on file. This certificate shall be deemed apart of and subject to the terms and conditions of warranty set forth on the reverse side of our order acknowledgment form. No other warranties are applicable.

Ryan Petersen, QA Manager Signature Aluminum Canada Inc

Chantal Lavoie

From: Chantal Lavoie [clavoie@dartaero.com]

Sent: September 13, 2010 1:21 PM

To: 'Burton, Doris'

Subject: extrusion

Hi Doris,
We have rec'd the extrusion D2622-120C from p/o: 12408, there is a problem with the extrusion which is acceptable to Dart Aerospace spec's at this time.
On the thickness it was.090" to .100" as to .080" on the dwg
On the width we measure 3.012" as to 3.000" on the dwg
On the height we measure 2.520 to 2.540" as to 2.500" on the dwg
Qc as ask to verify the die # 897123 to see if it is with Dart tolerance please advise what was the root cause.

Thanks
Chantal

Chantal Lavoie

From: Burton, Doris [Doris.Burton@signaturealuminumcanada.com]
Sent: September 15, 2010 8:40 AM
To: Petersen, Ryan
Cc: Chantal Lavoie
Subject: FW: extrusion

Ryan, this is Complaint # 39276. Please reply to Dart.
Thank you.

Doris Burton

Customer Account Representative
Signature Aluminum Canada Inc.
Phone: 1-800-563-1079 Fax: 1-800-565-8339
doris.burton@signaturealuminumcanada.com

-----Original Message-----
From: Chantal Lavoie [mailto:clavoie@dartaero.com]
Sent: Wednesday, September 15, 2010 7:51 AM
To: 'Chantal Lavoie'; Burton, Doris
Subject: RE: extrusion

Hi Doris,
Any news.
Thanks
Chantal

From: Chantal Lavoie [mailto:clavoie@dartaero.com]
Sent: September 13, 2010 1:21 PM
To: 'Burton, Doris'
Subject: extrusion

Hi Doris,
We have rec'd the extrusion D2622-120C from p/o: 12408, there is a problem with the extrusion which is acceptable to Dart Aerospace spec's at this time.
On the thickness it was.090" to .100" as to .080" on the dwg
On the width we measure 3.012" as to 3.000" on the dwg
On the height we measure 2.520 to 2.540" as to 2.500" on the dwg
Qc as ask to verify the die # 897123 to see if it is with Dart tolerance please advise what was the root cause.

Thanks
Chantal

Chantal Lavoie

From: Petersen, Ryan [Ryan.Petersen@signaturealuminumcanada.com]
Sent: February 11, 2011 12:56 PM
To: Burton, Doris; clavoie@dartaero.com
Cc: Dilisi, Vince
Subject: RE: extrusion -DAA-897123 8D
Attachments: DAA-897123 8D dimensions 09 13 10.pdf

Chantal, Doris did send me the request for a CAR on this last year and probably reminded me several times since then. Each time I failed to get it completed. I have completed it now.

This die is a difficult one to produce on our 9" press, and the die itself was built for a smaller press. That isn't to say that we cannot do this, we can. But it takes a little more care in how you stretch it since the results from the die are designed for a smaller press. I have the die flagged for any future orders to be measured thoroughly on our CMM. If the die we have is too far outside of the spec limits requiring an unusual amount of stretching, we will order a new die geared for our press. I need to gather the data first to see what to do next. I don't anticipate that we need a new die, but if the data shows that we do, we will get one designed and built.

Ryan Petersen, P.Eng
Quality Manager
Signature Aluminum Canada Inc.
Phone: (905) 427-2223 Fax: (905) 427-2202
Cell: 416-433-0274
ryan.petersen@signaturealuminumcanada.com

-----Original Message-----
From: Burton, Doris
Sent: Monday, February 07, 2011 9:03 AM
To: Petersen, Ryan
Cc: Dilisi, Vince; Bates, Margerie
Subject: FW: extrusion

Ryan, Dart requires a corrective action on our Complaint # 39276 dated September 15.
Would you please try to get to it today.
Thank you.

Doris Burton
Customer Account Representative
Signature Aluminum Canada Inc.
Phone: 1-800-563-1079 Fax: 1-800-565-8339
doris.burton@signaturealuminumcanada.com

-----Original Message-----
From: Chantal Lavoie [mailto:clavoie@dartaero.com]
Sent: Friday, February 04, 2011 1:41 PM
To: Burton, Doris
Subject: RE: extrusion

Hi Doris,
Sorry too be a bother but I never got a reply back for p/o: 12408. Material not to dwg spec's.
Thanks
Chantal

From: Burton, Doris [mailto:Doris.Burton@signaturealuminumcanada.com]
Sent: September 15, 2010 8:40 AM
To: Petersen, Ryan
Cc: Chantal Lavoie
Subject: FW: extrusion

Ryan, this is Complaint # 39276. Please reply to Dart.
Thank you.

Doris Burton
Customer Account Representative
Signature Aluminum Canada Inc.
Phone: 1-800-563-1079 Fax: 1-800-565-8339
doris.burton@signaturealuminumcanada.com

-----Original Message-----
From: Chantal Lavoie [mailto:clavoie@dartaero.com]
Sent: Wednesday, September 15, 2010 7:51 AM
To: 'Chantal Lavoie'; Burton, Doris
Subject: RE: extrusion

Hi Doris,
Any news.
Thanks
Chantal

From: Chantal Lavoie [mailto:clavoie@dartaero.com]
Sent: September 13, 2010 1:21 PM
To: 'Burton, Doris'
Subject: extrusion

Hi Doris,
We have rec'd the extrusion D2622-120C from p/o: 12408, there is a problem with the extrusion which is acceptable to Dart Aerospace spec's at this time.
On the thickness it was.090" to .100" as to .080" on the dwg
On the width we measure 3.012" as to 3.000" on the dwg
On the height we measure 2.520 to 2.540" as to 2.500" on the dwg
Qc as ask to verify the die # 897123 to see if it is with Dart tolerance please advise what was the root

signature aluminum CANADA INC.

8D-CORRECTIVE ACTION REPORT

Dated: **February 11, 2011**

Authorized By: Ryan Petersen

Signature(s):

Issued By: Ryan Petersen

D1 Team: Ryan Petersen (Quality Engineer Manager), Helder Sato (Quality Engineer), Doris Burton (customer service rep)

Subject: Extrusion dimensions from die DAA-897123 on PO 012408 were found out of specification by Dart 09 13 10.

The thickness measured 0.090" to 0.10"
The width measured 3.012".
The height measured 2.52" to 2.54"

D2. Root Cause Analysis

The standard tolerance and dimensioned tolerance limits as per the Signature drawing are shown on the attached drawing.

The width dimension and tolerance is 3" +/- 0.034" as per AA standard tolerance.
The height dimension and tolerance is 2.5" +/-0.034" as per AA standard tolerance.
The thickness is dimension and tolerance is 0.08" +/-0.01" as per the drawing.

A width of 3.012" is in specification.
Height greater than 2.534" is out of specification. Dart measured as high as 2.54".
Thickness greater than 0.09" is out of specification. Dart measured as high as 0.10".

The root cause is stretching. This die was designed for a smaller press and used to run at the Richmond Hill (RIH) extrusion plant. Although the die will run on the 9" press in Pickering, the finished dimensions are not the same as they would have been running the die in RIH. The extrusion dimensions are slightly bigger than top tolerance and the finished dimensions must be controlled by stretching to achieve nominal values.

Not enough care was taken to stretch the shape to nominal. The variance from top tolerance to just outside of tolerance is the evidence.

D3. Interim Containment Actions

No containment was necessary as there is no material in stock in Pickering.

D4. Verify Root Cause

Verification of the die card shows that the measured results on the run in question were near top tolerance.

D5. Permanent Corrective Action

The die has been flagged for dimensional inspection using the optical CMM. Sample inspection from future runs will be done on the CMM to verify finished dimensions.

The release of future orders to shipping will be controlled by the quality department.

D6. Validation

The inspection results will be validated by the quality department specifically on this die.

D7. Prevent Recurrence

The die may need to be replaced with a die built for the 9" press in Pickering pending the results from the inspection.

D8. Recognize the Team

Standard Aluminum Association tolerances apply unless otherwise noted.			DIE NUMBER	REV
CUST PART #:	TITLE BLOCK REV A	EUC	DAA-897123	A
CUST PART NAME: CUSTOM HOLLOW	ISN AND TOL BLOCK REMOVED	202		
PROPOSAL: REL. DATE 03/10/00	ALLOY 6061-T6		FINISH MILL	

ALL OUTSIDE SURFACES EXPOSED

± 0.86 mm = 3" ± 0.034

PRESS# 5
BOL# 3784
LO'C# T-16/T-18

Std. tolerance

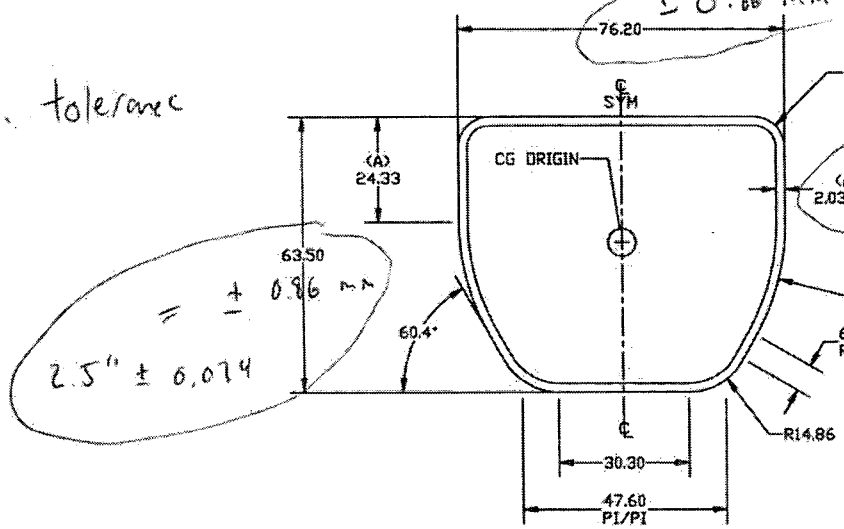

= 0.08" ± 0.01

= ± 0.86 mm

2.5" ± 0.034

	34.29
	3
	6
5	--
	1
	228 x 127
	PH
	2323
7-104	114
	P-142
--	--
2931	89
DAA-897123	127
--	--
--	--
	--
	YES
	ALUDIE

DART AEROSPACE LTD
ASSUMES BURDEN OF PROOF OF BONNELL
METAL IDENTIFICATION WITH NO I.D. MARK

DAA-897123

46024

DART AEROSPACE LTD.
1270 ABERDEEN ST.
HAWKESBURY ON K6A 1K7

SIGNATURE
ALUMINUM CANADA INC.

UNSPECIFIED WALLS:	2.03 mm / .080 in	MASS:	1.357 kg/m / .912 lb/ft
UNSPECIFIED RADII:	.25R mm / .010R in	EST PER:	482.50 mm / 18.996 in
		OUT PER:	247.63 mm / 9.749 in
		EXP PER:	mm / in
DATE:	03/10/00	BUFF PER:	mm / in
DRAWN:	VAN/KR	BUFF TURNS:	CLASS: Hollow II
SCALE:	FULL	FACTOR:	356 metric / 21 imperial
THM BAR:	NO	C.C.D.:	94.44 mm / 3.718 in
P&D CODE:	NO	P&D AREA:	mm² / in²

Structural values estimated for reference only.

Ix:	.2934 x 10^6 mm⁴	.705 in⁴	Iy:	.3713 x 10^6 mm⁴	.892 in⁴
Sx:	8.501 x 10^3 mm³	.519 in³	Sy:	9.745 x 10^3 mm³	.595 in³
CGx:	34.52 mm	1.359 in	CGy:	38.10 mm	1.500 in

REV	DESCRIPTION OF REVISION	DATE	BY
A	.558 WAS 1.000; .080 WALL WAS .085	09/21/02	KM

TABLE 11.2 Cross-Sectional Dimension Tolerances—Profiles ①

EXCEPT FOR T3510, T4510, T6510, T73510, T76510 AND T8510 TEMPERS ⑦

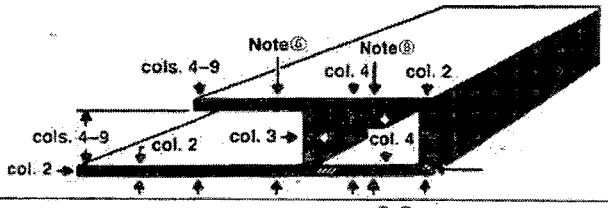

SPECIFIED DIMENSION mm		TOLERANCE ② ③—mm plus and minus															
		METAL DIMENSIONS ALLOWABLE DEVIATION FROM SPECIFIED DIMENSION WHERE 75 PERCENT OR MORE OF THE DIMENSION IS METAL ⑤ ⑩				SPACE DIMENSIONS ALLOWABLE DEVIATION FROM SPECIFIED DIMENSION WHERE MORE THAN 25 PERCENT OF THE DIMENSION IS SPACE ⑥ ⑧											
		All Except Those Covered by Column 3		Wall Thickness ④ Completely ⑤ Enclosing Space 70 mm ② and Over (Eccentricity)		At Dimensioned Points over 5 thru 15 mm from Base of Leg		At Dimensioned Points over 15 thru 30 mm from Base of Leg		At Dimensioned Points over 30 thru 60 mm from Base of Leg		At Dimensioned Points over 60 thru 100 mm from Base of Leg		At Dimensioned Points over 100 thru 150 mm from Base of Leg		At Dimensioned Points over 150 thru 200 mm from Base of Leg	
Col. 1		Col. 2		Col. 3		Col. 4		Col. 5		Col. 6		Col. 7		Col. 8		Col. 9	
over	thru	Standard Tolerance, All Except 5XXX Alloys ⑪	Precision Tolerance, All Except 5XXX Alloys	Standard Tolerance, All Except 5XXX Alloys ⑪	Precision Tolerance, All Except 5XXX Alloys	Standard Tolerance, All Except 5XXX Alloys ⑪	Precision Tolerance, All Except 5XXX Alloys	Standard Tolerance, All Except 5XXX Alloys ⑪	Precision Tolerance, All Except 5XXX Alloys	Standard Tolerance, All Except 5XXX Alloys ⑪	Precision Tolerance, All Except 5XXX Alloys	Standard Tolerance, All Except 5XXX Alloys ⑪	Precision Tolerance, All Except 5XXX Alloys	Standard Tolerance, All Except 5XXX Alloys ⑪	Precision Tolerance, All Except 5XXX Alloys	Standard Tolerance, All Except 5XXX Alloys ⑪	Precision Tolerance, All Except 5XXX Alloys
CIRCUMSCRIBING CIRCLE SIZES THRU 250 mm IN DIAMETER																	
..	3.20	0.15	0.10	±10% of specified dimension; ±1.50 max. ±.25 min.	±10% of specified dimension; ±1.50 max. ±.25 min.	0.25	0.17	0.30	0.20	..	..	..	..	..	..	..	..
3.20	6.30	0.18	0.12			0.30	0.20	0.36	0.24	0.41	0.27	..	..	..	..	..	..
6.30	12.50	0.20	0.13			0.36	0.24	0.41	0.27	0.46	0.30	0.50	0.33	..	..	..	..
12.50	20.00	0.23	0.15			0.41	0.27	0.46	0.30	0.50	0.33	0.56	0.37	..	..	..	..
20.00	25.00	0.25	0.17			0.46	0.30	0.50	0.33	0.56	0.37	0.64	0.42	0.76	0.50	..	..
25.00	40.00	0.30	0.20			0.54	0.36	0.58	0.38	0.66	0.44	0.76	0.50	0.88	0.58	..	..
40.00	50.00	0.36	0.24			0.60	0.40	0.66	0.44	0.78	0.51	0.92	0.61	1.05	0.69	1.25	0.83
50.00	100.00	0.60	0.40			0.86	0.57	0.96	0.63	1.20	0.79	1.45	0.96	1.70	1.12	2.05	1.35
100.00	150.00	0.86	0.57			1.10	0.73	1.25	0.83	1.65	1.09	2.00	1.32	2.40	1.58	2.80	1.85
150.00	200.00	1.10	0.73			1.35	0.89	1.55	1.02	2.10	1.39	2.50	1.65	3.05	2.01	3.55	2.34
200.00	250.00	1.35	0.89			1.65	1.09	1.90	1.25	2.50	1.65	3.05	2.01	3.70	2.44	4.30	2.84
CIRCUMSCRIBING CIRCLE SIZES OVER 250 mm IN DIAMETER																	
..	3.20	0.36	0.24	±15% of specified dimension; ±2.30 max. ±.38 min.	±15% of specified dimension; ±2.30 max. ±.38 min.	0.46	0.30	0.50	0.33	..	..	..	..	..	..	..	..
3.20	6.30	0.38	0.25			0.48	0.32	0.56	0.37	0.72	0.48	..	..	..	..	..	..
6.30	12.50	0.41	0.27			0.50	0.33	0.60	0.40	0.76	0.50	1.25	0.83	..	..	..	..
12.50	20.00	0.43	0.28			0.56	0.37	0.68	0.45	1.00	0.66	1.50	0.99	..	..	..	..
20.00	25.00	0.46	0.30			0.58	0.38	0.76	0.50	1.25	0.83	1.80	1.19	2.30	1.52	..	..
25.00	40.00	0.48	0.32			0.60	0.40	0.86	0.57	1.50	0.99	2.05	1.35	2.55	1.68	..	..
40.00	50.00	0.60	0.40			0.86	0.57	1.10	0.73	1.80	1.19	2.30	1.52	2.80	1.85	4.30	2.84
50.00	100.00	0.86	0.57			1.10	0.73	1.35	0.89	2.05	1.35	2.55	1.68	3.05	2.01	4.55	3.00
100.00	150.00	1.10	0.73			1.35	0.89	1.65	1.09	2.30	1.52	2.80	1.85	3.30	2.18	4.85	3.20
150.00	200.00	1.35	0.89			1.65	1.09	1.90	1.25	2.55	1.68	3.05	2.01	3.55	2.34	5.10	3.37
200.00	250.00	1.65	1.09			1.90	1.25	2.15	1.42	2.80	1.85	3.30	2.18	3.80	2.51	5.35	3.53
250.00	300.00	1.90	1.25			2.15	1.42	2.40	1.58	3.05	2.01	3.55	2.34	4.05	2.67	5.60	3.70
300.00	350.00	2.15	1.42			2.40	1.58	2.65	1.75	3.30	2.18	3.80	2.51	4.30	2.84	5.85	3.86
350.00	400.00	2.40	1.58			2.65	1.75	2.90	1.91	3.55	2.34	4.05	2.67	4.55	3.00	6.10	4.03
400.00	450.00	2.65	1.75			2.90	1.91	3.15	2.08	3.80	2.51	4.30	2.84	4.85	3.20	6.35	4.19
450.00	500.00	2.90	1.91			3.15	2.08	3.40	2.24	4.05	2.67	4.55	3.00	5.10	3.37	6.60	4.36
500.00	550.00	3.15	2.08			3.40	2.24	3.65	2.41	4.30	2.84	4.85	3.20	5.35	3.53	6.85	4.52
550.00	600.00	3.40	2.24			3.65	2.41	3.90	2.57	4.55	3.00	5.10	3.37	5.60	3.70	7.10	4.69

Footnotes for Tables 11.2 through 11.4

① These Standard and Precision Tolerances are applicable to the average profile. The extrusion conditions required to produce the wide variety of alloy-temper and profile combinations require close review between customer and producer to determine critical characteristics and tolerance capability. Agressive profile characteristics may require wider than standard tolerance and closer than precision tolerance may be feasible for other characteristics.

② The tolerance applicable to a dimension composed of two or more component dimensions is the sum of the tolerances of the component dimensions if all of the component dimensions are indicated.

③ When a dimension tolerance is specified other than as an equal bilateral tolerance, the value of the standard tolerance is that which applies to the mean of the maximum and minimum dimensions permissible under the tolerance for the dimension under consideration.

④ Where dimensions specified are outside and inside, rather than wall thickness itself, the allowable deviation (eccentricity) given in Column 3 applies to mean wall thickness. (Mean wall thickness is the average of two wall thickness measurements taken at opposite sides of the void.)

⑤ In the case of Class 1 Hollow Profiles the standard wall thickness tolerance for extruded round tube is applicable. (A Class 1 Hollow Profile is one whose void is round and one inch or more in diameter and whose weight is equally distributed on opposite sides of two or more equally spaced axes.)

(Continued on bottom of next page)